**COMMERCIAL IN CONFIDENCE**

*This document is provided for the purpose of demonstrating compliance with the appropriate performance levels required by a designated third party. It should not be divulged to any other parties without the approval of the client named below. This document remains the property of the client.*

# ASSESSMENT REPORT IFCA/08096

## Assessment of the contribution to fire resistance of the Cullen Gripper joist penetration sealing system when used in conjunction with a floor constructed from composite timber joist I-beams (mortar on the cavity side only)

Prepared on behalf of:

Cullen Building Products Ltd
1 Wheatstone Place
Southfield Industrial Estate
Glenrothes
KY6 2SW

*NOTE: This report should not be manipulated, abridged or otherwise presented without the written consent of International Fire Consultants Ltd*

Ref: X/Assess/2008/08096/#8977

August 2008

# ISSUE RECORD

| Issue | Date | Recipient | Comments |
|---|---|---|---|
| Original | 08/08/08 | Cullen Building Products Ltd | In electronic (pdf) and hard copy format |
| | | | |
| | | | |
| | | | |
| | | | |
| | | | |

# AMENDMENT RECORD

| Date | Paragraph | Amendment |
|---|---|---|
| | | |
| | | |
| | | |
| | | |
| | | |
| | | |
| | | |
| | | |

| Revision | IFCA/08096 | | | | | |
|---|---|---|---|---|---|---|
| Author | CM | | | | | |
| Reviewer | PEJ | | | | | |

## CONTENTS

# 1. INTRODUCTION

This report has been produced by International Fire Consultants Ltd (IFC) for our assessment of the contribution to fire resistance of the Cullen Gripper joist penetration sealing system, used in conjunction with a floor built from composite timber joist I-beams when used in conjunction with a brickwork/blockwork twin-leaf party wall with respect to fire spread between dwellings. In this report, the Cullen Gripper is considered with mortar applied on the cavity side. IFC have performed the evaluations/analysis, and preparation of the assessment report, on the instruction of Cullen Building Products Ltd.

Fire resisting assemblies are rarely supplied in an identical form to that which was tested. The specification will invariably require the construction to be supplied at a size, span, with linings, hardware, etc. which are different from that tested. The result of a fire resistance test can apply to variations in configurations/construction as long as they do not reduce the performance to one which is below that specified. The influence of those variations is covered by a judgement, sometimes made by the approving authority.

Where the approving authority does not feel technically able to make such judgements, or does not wish to take responsibility for them then a third party's expert opinion is often sought. Such an opinion is often expressed in the form of an assessment of the performance, which may be supported by numerical/quantifiable methods or may be purely an expert judgement.

When establishing the variations in the construction that can achieve the required fire resistance performance, International Fire Consultants Ltd follow the guidance given in BS.ISO/TR12470: 1998, *"Fire resistance tests - Guidance on the application and extension of results".*

The assessment is based upon the constructional information supplied to us (detailed in Section 2) and upon the fire resistance test evidence for parts of the constructions (detailed in Section 3). A full analysis of the fire resistance performance of these assemblies is presented in Section 4.

# 2. PROPOSAL

It is proposed that this Assessment Report shall establish the contribution to fire resistance performance of a Cullen Gripper when installed at the end of the I-joists of floor constructions (as outlined in Section 2.1) set in the brickwork/blockwork of a twin-leaf party wall. In this Assessment Report, the Cullen Gripper is considered with mortar applied on the cavity side.

The Assessment Report shall consider the performance in terms of the provision of a 60 minute fire separation between dwellings when built into a brickwork/blockwork twin-leaf party wall.

The assessed Cullen Gripper is generally based upon details shown on the drawings and/or schedules, provided by Cullen Building Products Limited, copies of which are kept on file by IFC for reference. The construction and details of the assemblies are summarised in Sections 2.1, 2.2 and 2.3 but the documents should be read in conjunction with this report for full interpretation.

Anyone using this report should verify that copies of documents in their possession match those copies which are kept on file by IFC. If variations occur between details described, herein, and those on the relevant documents, the former shall take precedence, or IFC should be contacted for clarification. Refer to Section 6 for recommendations with respect to audit and verification of the manufactured/installed assemblies.

The Cullen Gripper has not been tested in a full sized floor for fire resistance performance in the form and/or configuration proposed, hence the requirement for this assessment of fire resistance performance.

The Cullen Gripper and the installation method is presented in **Figures 08096/03** to **05**.

## 2.1 Floor Construction and its Approved Variations

The conclusions in respect of the contribution that is made by the Cullen Gripper to the fire resistance of the floor/separating wall junction applies to floor constructions detailed below that have been either tested or assessed to provide at least 30 minutes fire resistance with respect to the requirements of BS476: Part 20: 1987;

| | |
|---|---|
| Flooring: | 22mm or 18mm flooring grade chipboard, 18mm OSB, 18mm flooring grade plywood, or 21mm T&G (dead knot free) softwood boarding fixed across the joists in a staggered pattern. |
| Joists: | Composite timber joist I-beams installed at centres not exceeding 600mm. In addition to solid timber chords, I-beams constructed from laminated veneer lumber (LVL) or orientated strand board (OSB) chords with density no lower than 600kg/m$^3$ are acceptable. The range of timber joist I-beam dimensions covered by this assessment is limited to those identified in **Figure 08096/03.** |
| Ceiling: | 15mm Gypsum wallboard (BS1230: Part 1: 1985: Type 1) with no board edge noggins (no skim), 12.5mm Gypsum wallboard (BS1230: Part 1: 1985: Type 1) with board edge noggins plus 2mm Gypsum plaster skim, or 12.5mm 'fire resisting' Fireline plasterboard (BS1230: Part 1: 1985: Type 5) with no board edge noggins (no skim). Ceiling fixings to be 36mm long dry wall screws at 230mm centres with the short edges of the boards running parallel to the joists, staggered on adjacent boards. All joints to be taped and filled using jointing compound and tape.<br>(Optional) Ceiling cavity insulation – Glasswool or rock fibre, maximum density 33kg/m$^3$, laid on back of ceiling lining, subject to plasterboard lining to not less than 15mm thick. |

| | |
|---|---|
| Ceiling Board Fixings: | Screw fixed at 230mm centres with boards running at right angles to the joist; no panel to span less than 2 joists i.e. 1200mm. |
| Noggins: | Only required for boards spanning less than 2 joists. |
| Joints: | 3 to 5mm wide gap with plaster fill and 'hooks'. |

## 2.2 Cullen Gripper Construction

The Cullen Gripper is pressed and formed from 0.6mm thick galvanised mild steel. The galvanised mild steel is folded as shown in **Figure 08096/01 and 02**.

The Cullen Gripper is manufactured with dimensions such that the product fits the range of I-joist sizes presented in **Figure 08096/03**. In all cases the channel in which the I-joist web fits is 10.5mm wide (measured internally) and 30mm deep. Dimensions H and D as shown in **Figure 08096/01** vary. This is dependent upon the I-joist dimensions that the Cullen Gripper is being fitted to. The dimensions H, D and W correspond to the I-joist dimensions such that the turned out flange (length H and width D) span the two voids either side of the timber web (between the upper and lower timber chord).

## 2.3 Cullen Gripper Installation

### General

The Cullen Gripper is fitted onto the end of the timber I-joist such that the 9mm thick web is inserted fully within the receiving channel of the Cullen Gripper. The two turned out flanges of the Cullen Gripper each span one of the two voids either side of the timber web between the upper and lower timber chord. There is a tab at the end of each turned out flange i.e. four in total. The four tabs create an interference fit with the inner surfaces of the timber chords. Each tab has a profile that grips the timber chord preventing the Cullen Gripper being easily forced back out of position once fitted onto the timber I-joist. See **Figures 08096/03-05**.

Timber I-joists fitted with the Cullen Gripper are installed with a minimum bearing onto the masonry of 90mm. At the end of the I-joist, behind the Cullen Gripper in the opening of the blockwork a mortar key is applied. The mortar key is applied such that it completely fills the void behind the Cullen Gripper and is flush with the cavity face of the wall leaf. The Cullen Gripper is positioned such that there is a minimum of 10mm thick mortar at the narrowest point i.e. measured from the back of the Cullen Gripper where it fits the I-joist web and the cavity face. This 10mm minimum dimension is shown in **Figures 08096/04 and 05.** It is not approved to install the Cullen Gripper without applying mortar to the cavity side.

The cavity of the twin-leaf party wall is either left empty or packed with mineral rock fibre (MRF).

**Aperture dimensions**

The dimensions of the apertures within the blockwork into which the Cullen Grippers are installed is either:

- Equal to the outside dimensions of the timber I-joist
- Slightly wider, approximately 10mm on three sides of the timber I-joists.

If the dimensions of the aperture are equal to the outer dimensions of the timber I-joist chords the mortar should be applied in the voids behind the Cullen Gripper i.e. on the cavity side only and it is not necessary to seal the seams around the edges of the chords.

If the dimensions of the aperture are 10mm wider (on three sides; top, left and right hand side) it is a requirement of this assessment that the voids around the timber I-joist are fully filled with mortar.

**Wall and mortar application**

It is a requirement of this assessment that the wall leaf in which the Cullen Gripper is installed is at least 100mm thick. The voids on the cavity side, just behind the Cullen Gripper should be nominally 'filled' with mortar. The mortar should be applied so that it is almost flush with the wall surface and so that there is a minimum thickness of 10mm mortar cover to the back edge of the Cullen Gripper.

It is a requirement of this assessment that mortar is applied such that it adheres to the wall and remains in place in order to keep the penetration properly sealed.

# 3. TEST EVIDENCE

There is no standard method by which the fire stopping properties of the Cullen Gripper can be tested to establish its contribution to fire resistance. As a consequence, this assessment has been made based upon ad-hoc furnace based test evidence which can be used to form the basis of the technical evaluation. The assessment is further supported by International Fire Consultants Ltd's understanding of the behaviour of structural timber based elements utilising BS5268 Parts 2 & 4.1 and its particular knowledge in respect of the behaviour of steel, and the steel design codes BS5950 Part 1 & Part 8, and the dimensions of the Cullen Gripper.

Test evidence available to support International Fire Consultants Ltd's assessment of the contribution to fire resistance of the Cullen Gripper is summarised in Section 3.1 below;

### 3.1 CFR Test No. 0806181

This test was carried out at the laboratory of Cambridge Fire Research on the 18th June 2008. The test followed the general principles of the BS476: Part 20: 1987 fire test standard, was conducted by Cambridge Fire Research Ltd. (CFR) and managed/witnessed by IFC.

The test construction was built into a steel-reinforced test frame with an opening width of 1.2m and a height of 1.9m. A blockwork wall, of 440mm long x 215mm high x 100mm thick medium density concrete blocks, was built into the test frame to form a furnace closure. This was intended to represent a single leaf of a building party wall.

Attached to the wall and cantilevered out from it was a sample representing a typical floor construction, nominally 1m x 1m in size. This comprised three I-joists which were decked with 22mm-thick chipboard and underdrawn with 15mm standard plasterboard. The end of each joist, the end sitting within suitably sized slots in the blockwork, was fitted with a Cullen Gripper and mortared on the unexposed side. The unexposed side in this case represents the cavity side in the real application. As the floor sample was to be exposed on all sides and surfaces, except where it abutted the wall, the sides and outer edges were also lined with 15mm plasterboard.

The outer I-joist ends were identified as 'A' and 'C' and provided with 10mm mortar cover to the back of the Cullen Gripper. The central I-joist end was identified as 'B' and was provided with 5mm mortar cover to the back of the Cullen Gripper.

A shear load was applied on the upper surface of the floor construction, close to the supporting wall, and with the outer end of the joists and linings supported on concrete blocks at the back of the furnace. The load was applied in the form of weights on the external (non-fire) side of the wall, with a prefabricated steel frame bearing on the floor decking and connected through holes made in the wall to 1m-long bearers supported on blocks at their outer end. Weights totalling approximately 120kg were laid on the bearers close to the wall, with a calculated resultant load of 100kg (i.e. 33kg per joist) applied to the floor sample.

In addition to the simulated floor type construction, a Cullen Gripper was fixed to a single I-joist installed in the upper region of the wall. The I-joist protruded 100mm beyond the wall and into the furnace. This I-joist end was identified as 'D' and provided with 10mm mortar cover to the back of the Cullen Gripper.

The test construction was subjected to heating in accordance with the general principles of BS476: Part 20: 1987. The test was terminated after 75 minutes of heating. There was no integrity failure recorded during the test. After 60 minutes of heating the rise in surface temperature of the mortar on the back of each specimen was as follows:

**I-joist 'A':** 261°C
**I-joist 'B':** 254°C
**I-joist 'C':** 168°C
**I-joist 'D':** 254°C

# 4. ANALYSIS

There are three main components contributing to the fire separation between dwellings which incorporate floors constructed using I-joist systems fitted with the Cullen Gripper. These are as follows;

- duration of ceiling protection
- mode of failure of the floor
- the resistance to burn-through of the I-joist end-section fitted with the Cullen Gripper (and any applied protection)

## 4.1 Duration of the ceiling protection

A ceiling, normally of gypsum, forms a protective membrane that protects the void and the joists between the ceiling and the flooring from excessive heat. It must provide sufficient fire protection to the joists and the flooring such that they will achieve the necessary fire resistance of the floor as documented in the regulations. In this situation the Cullen Gripper will have no detrimental impact upon the fire resistance of the floor system. However, if the ceiling, or parts of the ceiling fall away, or even large gaps occur, it will be possible for hot gases to penetrate into the floor void leading to the ignition of the timber I-joists and also attack the 'fire stop' provided in the plane of the separating wall. This makes consideration from the point at which I-joists are ignited a pessimistic situation and hence all subsequent analysis will include a margin of safety related to the ceiling performance.

The primary function of the Cullen Gripper is to assist in meeting air leakage requirements with the secondary function being to provide a cavity fire stop to prevent spread of fire from dwelling to dwelling. Based upon residential dwellings of not more than 18m height, the separating wall should prevent the spread of fire for 60 minutes which would be expressed in terms of fire resistance in respect of integrity and insulation between the two dwellings. Each dwelling could have a 30 minute timber floor built into the leaf of the party wall meaning that there would be Cullen Grippers installed opposite each other at I-joist end sections across the cavity. These floors are required to have a 30 minute fire resistance in terms of loadbearing capacity, albeit the integrity and insulation requirements may not be required to satisfy the full 30 minutes in all cases. As the timber I-joists have an inherent loadbearing capacity of 5 minutes, or a little more, there should be no exploitation of the cavity by the fire for 25 minutes. The firestopping shall be required to provide 30 minutes of the 60 minutes fire resistance.

In this respect the sample floor construction tested in CFR0806181 was more onerous than a typical timber floor of a dwelling with a 30 minute fire resistance performance in terms of loadbearing capacity. This is due to the floor construction being exposed to heating from the sides and above. When situated within a dwelling the exposure would only be expected to be from below. For this reason the cavity was exploited earlier than would typically be expected meaning the tested I-joist end-sections fitted with the Cullen Gripper would have to provide in excess of 30 minutes of the 60 minutes fire resistance.

## 4.2 Mode of failure of the floor

Following ignition within the floor cavity, fire will start to attack and burn away the timber I-joist web and the top and bottoms flanges. The web, being thin, will only withstand fire attack for a typical period of approximately 5 minutes. This will have a significant influence on the structural interaction between the top and bottom flanges and will, without doubt, lead to failure. Rapid deflection followed quickly by failure of the floor will then occur.

## 4.3 Resistance to burn through of the timber I-joists

Following failure of the floor, sections of I-joist protruding from the blockwork will be exposed to heating and will then start to be consumed by the fire. The remaining length of I-joist and the Cullen Gripper will be required to provide the rest of the fire resistance performance.

It would be a very onerous assumption that all of the timber protruding from the wall, which is directly exposed to the fire, will have been removed through collapse when the ceiling fails. Following this assumption only the timber I-joist part that is within the wall is present when the heating starts. In this case the cross-section area of the timber I-joist will start to char. Assuming consumption of the cross section along the axis and a charring rate of 0.8mm/min the thickness of the timber I-shaped 'plug' will reduce at a rate of 0.8mm/min. After a heating time of 60 minutes, which is very onerous given the protection offered by the floor construction, the thickness of the 90mm long (corresponding to minimum bearing) timber I-shaped section is still 42 mm.

## 4.4 Analysis of tested performance

The tested construction in Test CFR No. 0806181 generally behaved in the manner described above in 4.1 to 4.3. In addition to this, the test showed that mortar, applied as specified within Section 2 of this report, will not be forced out of position by expansion of the Cullen Gripper during 60 minutes heating.

**Integrity performance**

Test CFR No. 0806181, in which a floor construction was simulated, has demonstrated that after 60 minutes heating there is no integrity failure on the unexposed side of a single leaf blockwork wall which has I-joists installed as proposed. This is despite a more onerous test construction in that the cavity of the floor construction was exploited much earlier than would be expected in practice.

The I-joist end detail designated 'D' has demonstrated that after 60 minutes heating there is still no integrity failure on the unexposed side of a single leaf blockwork wall which has I-joists installed as proposed, even in the particularly onerous condition of there being no protection provided by a floor construction.

**Insulation performance**

The limits for temperature rise on the unexposed side specified in BS476: Part 20: 1987 are an average temperature rise of 140°C and a maximum temperature rise of 180°C: Following 60 minutes heating, the maximum rise in surface temperature recorded on the mortar applied to the back of any of the tested Cullen Grippers was 261°C. Clearly this does not meet the stated criteria for insulation performance. It should however be noted that the tested construction comprised of a single leaf wall whilst the Cullen Gripper is actually installed within a twin-leaf party wall as proposed in Section 2 to this report. It is across the two separate leaf constructions that the fire resistance performance between dwellings must be considered.

Should the void between each wall leaf be left empty, a temperature rise of 261°C and hence a surface temperature in the order of 280°C on one internal cavity face after 60 minutes heating will not cause sufficient radiated or convected heat transfer to raise the surface temperature on the dwelling side of the twin leaf cavity wall in excess of 180°C. Although, the internal cavity face temperature of 280°C would not be expected to cause typical building materials to ignite or char, additional materials other than those described should not be present within the cavity. It is therefore the opinion of International Fire Consultants Ltd that if a floor within a dwelling was subjected to full scale fire resistance test conditions, in accordance with BS476: Part 20: 1987, there would be no loss of integrity or insulation between two adjacent dwellings with a twin-leaf party wall, if one or even both dwellings were fitted with Cullen Grippers with mortar keys at timber I-joist end sections on the cavity side, for a period of at least 60 minutes.

If the cavity is packed with mineral rock fibre (MRF), again, heat transfer through the construction will not be sufficient to raise the surface temperature on the dwelling side of the twin leaf cavity wall in excess of 180°C. It is therefore the opinion of International Fire Consultants Ltd that if a floor within a dwelling was subjected to full scale fire resistance test conditions, in accordance with BS476: Part 20: 1987, there would be no loss of integrity or insulation between two adjacent dwellings with a twin-leaf party wall packed with MRF, if one or even both dwellings were fitted with Cullen Grippers with mortar keys at timber I-joist end sections on the cavity side, for a period of at least 60 minutes.

Similarly, the temperature reached within the cavity would not be the cause of ignition of any combustible cellulosic materials thereby restricting the risk of disproportionate damage to either structure.

# 5. CONCLUSION

It is the opinion of International Fire Consultants Ltd that, if a floor within a dwelling was subjected to full scale fire resistance test conditions, in accordance with BS476: Part 20: 1987, there would be no loss of integrity and insulation between two adjacent dwellings with a twin-leaf party wall, if one or even both dwellings were fitted with Cullen Grippers with mortar keys at timber I-joist end sections on the cavity side, for a period of at least 60 minutes. Also there would be no realistic likelihood that an ignition would be generated in the cavity that could lead to disproportionate damage in the event of a fire.

# 6. LIMITATIONS

This Assessment Report, which is only valid for the Cullen Gripper with mortar keys on the cavity side, addresses itself solely to the ability of the assemblies described to satisfy the criteria of the fire resistance test. It does not imply any suitability for use with respect to other unspecified criteria.

This document only considers the Cullen Gripper described herein, and assumes that the surrounding construction will provide no less restraint than the tested assembly, and that it will remain in place and be substantially intact for the full fire resistance period.

This Assessment Report is only applicable to the Cullen Gripper when used in conjunction with composite timber joist I-beams. Composite timber joist I-beams with lattice or non-continuous web sections are not covered by this report.

Where the constructional information in this report is taken from details provided to International Fire Consultants Ltd (IFC) and/or from fire resistance test reports referenced herein, it is, therefore, limited to the information given in those documents. It is necessarily dependent upon the accuracy and completeness of that information. Where constructional or manufacturing details are not specified, or discussed herein, it should not, therefore, be taken to infer approval of variation in such details from those tested or otherwise approved.

Where the assessed constructions have not been subject to an on-site audit by International Fire Consultants Ltd, it is the responsibility of anyone using this report to confirm that all aspects of the assemblies fully comply with the descriptions and limitations herein.

Any materials specified in this report have been selected and judged primarily on their fire performance. IFC do not claim expertise in areas other than fire safety. Whilst observing all possible care in the specification of solutions, we would draw the reader's attention to the fact that during the construction and procurement process, the materials used should be subjected to more general examination regarding the wider Health and Safety, and CoSHH Regulations.

This Report is provided to the sponsor on the basis that it is a professional independent engineering opinion as to what the fire performance of the construction/system would be should it be tested to the named standard. It is IFC's experience that such an opinion is normally acceptable in support of an application for building approvals, certainly throughout the UK and in many parts of Europe and the rest of the world.

However, unless IFC have been commissioned to liaise with the Authorities that have jurisdiction for the building in question for the purpose of obtaining the necessary approvals, IFC cannot assure that the document will satisfy the requirements of the particular building regulations for any building being constructed.

It is, therefore, the responsibility of the sponsor to establish whether this evidence is appropriate for the application for which it is being supplied and IFC cannot take responsibility for any costs incurred as a result of any rejection of the document for reasons outside of our control. Early submittal of the Report to the Authorities will minimise any risks in this respect.

# 7. VALIDITY

This assessment has been prepared based on International Fire Consultants Ltd's present knowledge of the products described, the stated testing regime and the submitted test evidence. For this reason anyone using this document after August 2013 should confirm its ongoing validity.

Prepared by:

**Chris Marriner**
**BEng (Hons)**
Consultant
International Fire Consultants Ltd

Checked by:

**Peter E Jackman**
**IEng MIFireE FBEng AIWSc**
Technical Director
International Fire Consultants Ltd

# APPENDIX A

**Figures 08096/01 to 05**

***The figures in this Appendix are not included***
***In the sequential page numbering of this report***

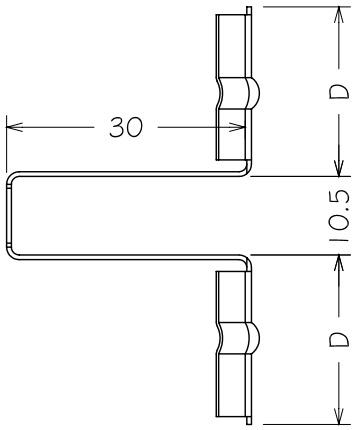


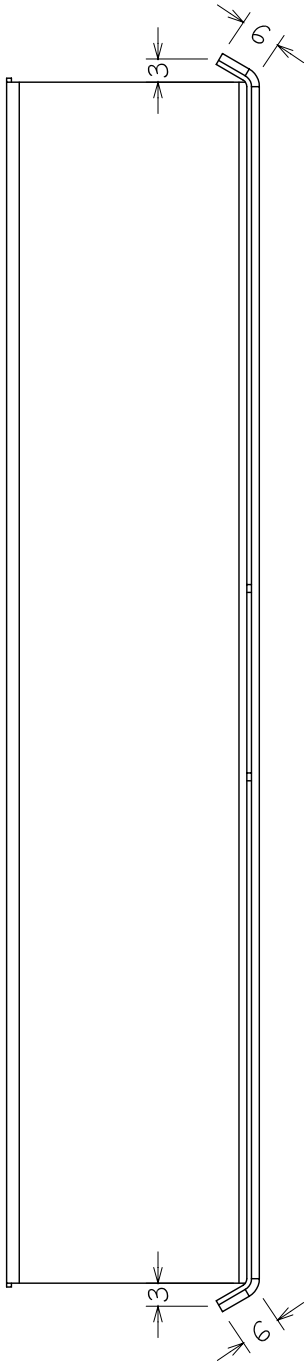


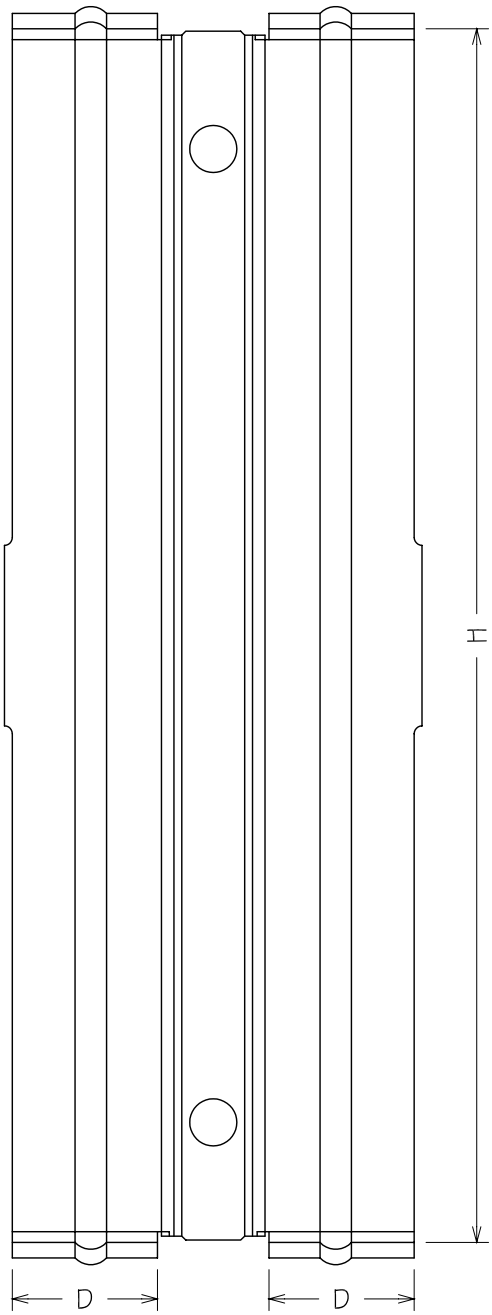




INTERNATIONAL FIRE CONSULTANTS LTD
20 Park Street Princes Risborough Buckinghamshire HP27 9AH United Kingdom
Tel: +44 (0) 1844 275500 Fax: +44 (0) 1844 274002 Email: ifc@intfire.com Website: http://www.intfire.com

Assessment Report IFCA/08096
Cullen Building Products Ltd
Cullen Gripper Joist Penetration Sealing System when used in Conjunction with a Floor Constructed from Composite Timber Joist I-beams

Cullen Gripper

| | |
|---|---|
| Job number : 8977 | |
| Drawn by : CSP | Checked by : CM |
| Not To Scale | July 2008 |
| 08096/01 | |

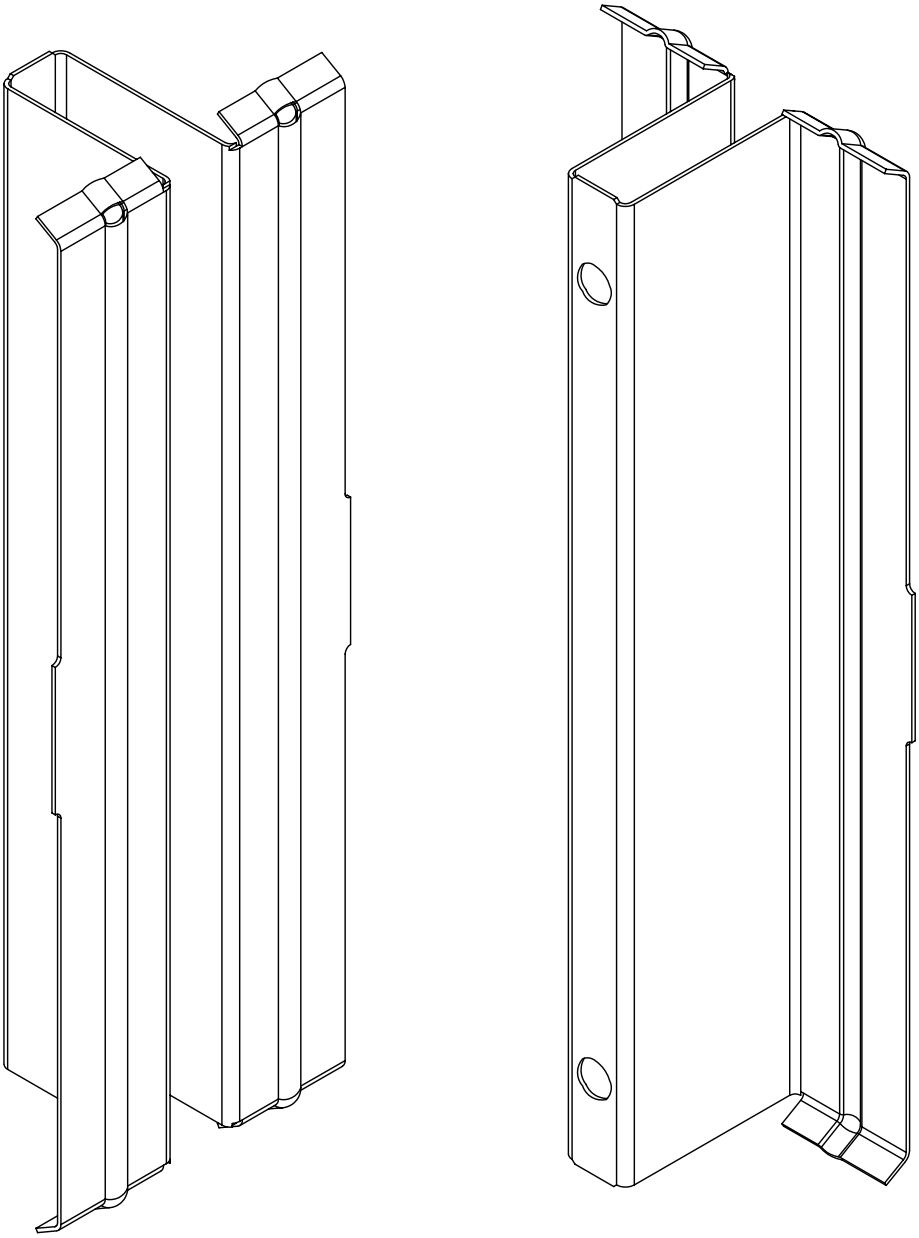



INTERNATIONAL FIRE CONSULTANTS LTD
20 Park Street Princes Risborough Buckinghamshire HP27 9AH United Kingdom
Tel: +44 (0) 1844 275500 Fax: +44 (0) 1844 274002 Email: ifc@intfire.com Website: http://www.intfire.com

Assessment Report IFCA/08096
Cullen Building Products Ltd
Cullen Gripper Joist Penetration Sealing System when used in Conjunction with a Floor Constructed from Composite Timber Joist I-beams

Isometric View of Cullen Gripper

| | |
|---|---|
| Job number : 8977 | |
| Drawn by : CSP | Checked by : CM |
| Not To Scale | July 2008 |
| 08096/02 | |

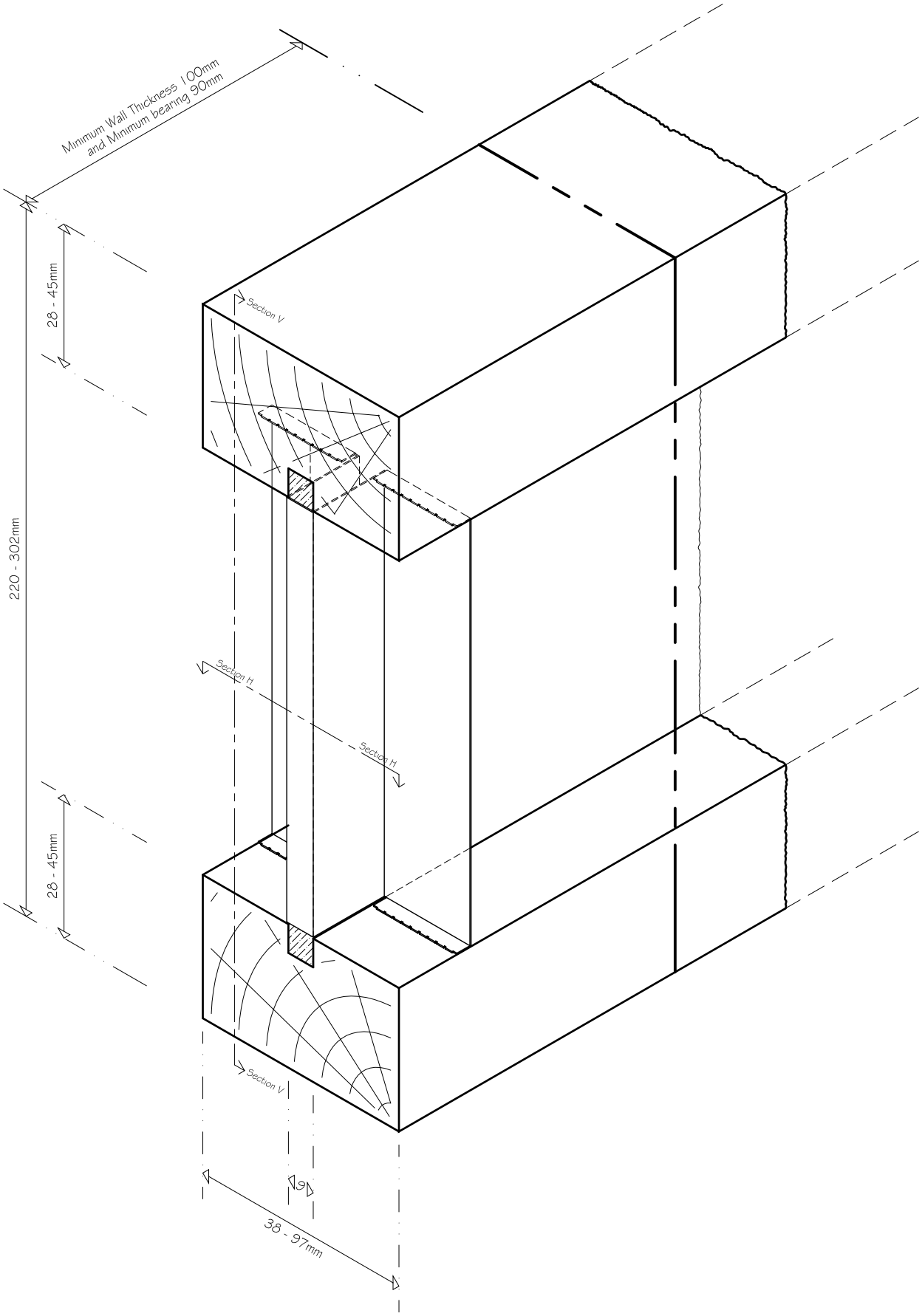




INTERNATIONAL FIRE CONSULTANTS LTD
20 Park Street Princes Risborough Buckinghamshire HP27 9AH United Kingdom
Tel: +44 (0) 1844 275500 Fax: +44 (0) 1844 274002 Email: ifc@intfire.com Website: http://www.intfire.com

Assessment Report IFCA/08096
Cullen Building Products Ltd
Cullen Gripper Joist Penetration Sealing System when used in Conjunction with a Floor Constructed from Composite Timber Joist I-beams

Iso-metric View of Cullen Gripper
(Brickwork & Mortar Omitted for Clarity)

| | |
|---|---|
| Job number : 8977 | |
| Drawn by : CSP | Checked by : CM |
| Not To Scale | July 2008 |
| 08096/03 | |

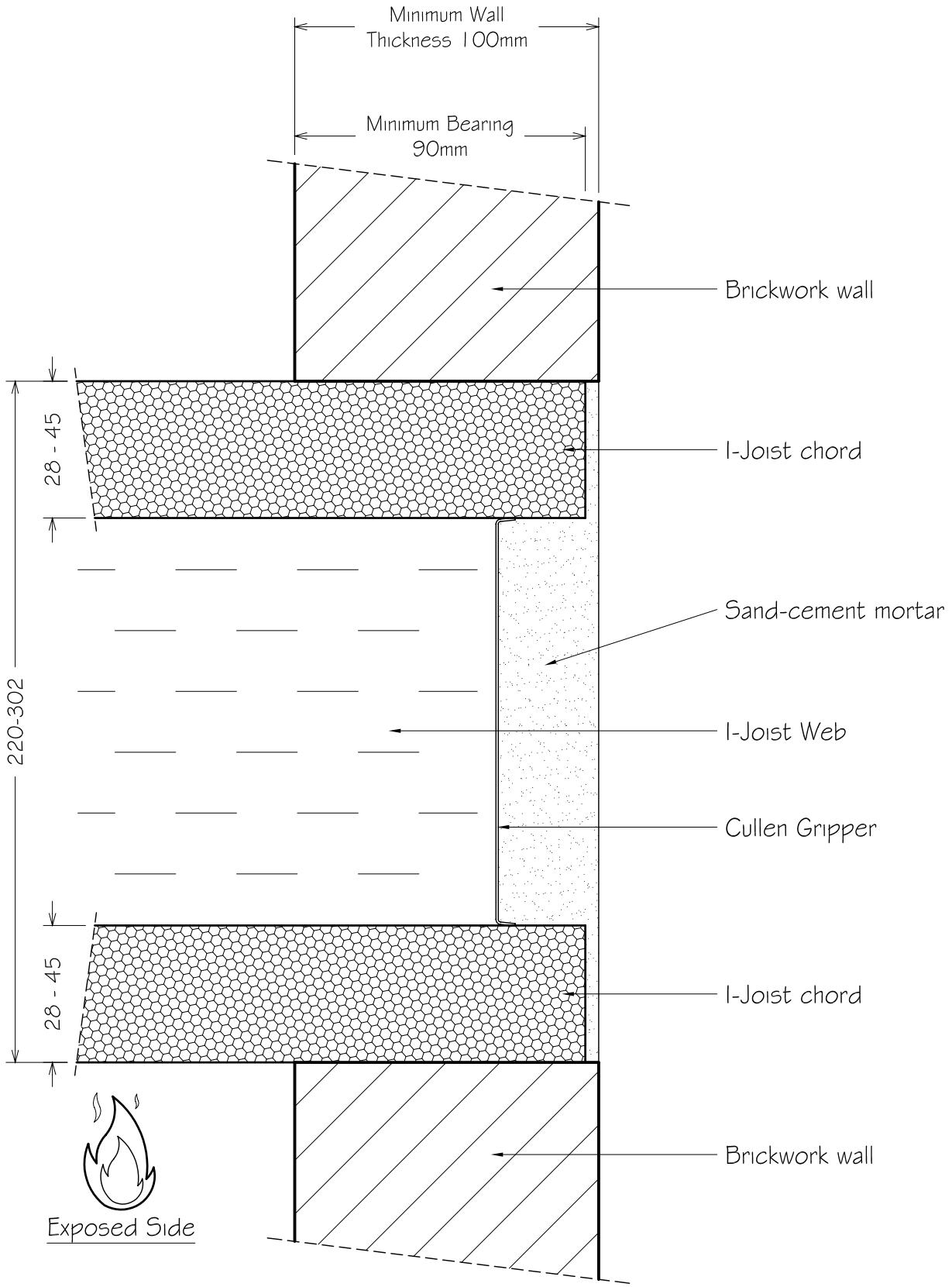




INTERNATIONAL FIRE CONSULTANTS LTD
20 Park Street Princes Risborough Buckinghamshire HP27 9AH United Kingdom
Tel: +44 (0) 1844 275500 Fax: +44 (0) 1844 274002 Email: ifc@intfire.com Website: http://www.intfire.com

Assessment Report IFCA/08096
Cullen Building Products Ltd
Cullen Gripper Joist Penetration Sealing System when used in Conjunction with a Floor Constructed from Composite Timber Joist I-beams

Section V-V:
Vertical Cross Section

| | |
|---|---|
| Job number : 8977 | |
| Drawn by : CSP | Checked by : CM |
| Not To Scale | July 2008 |
| 08096/04 | |

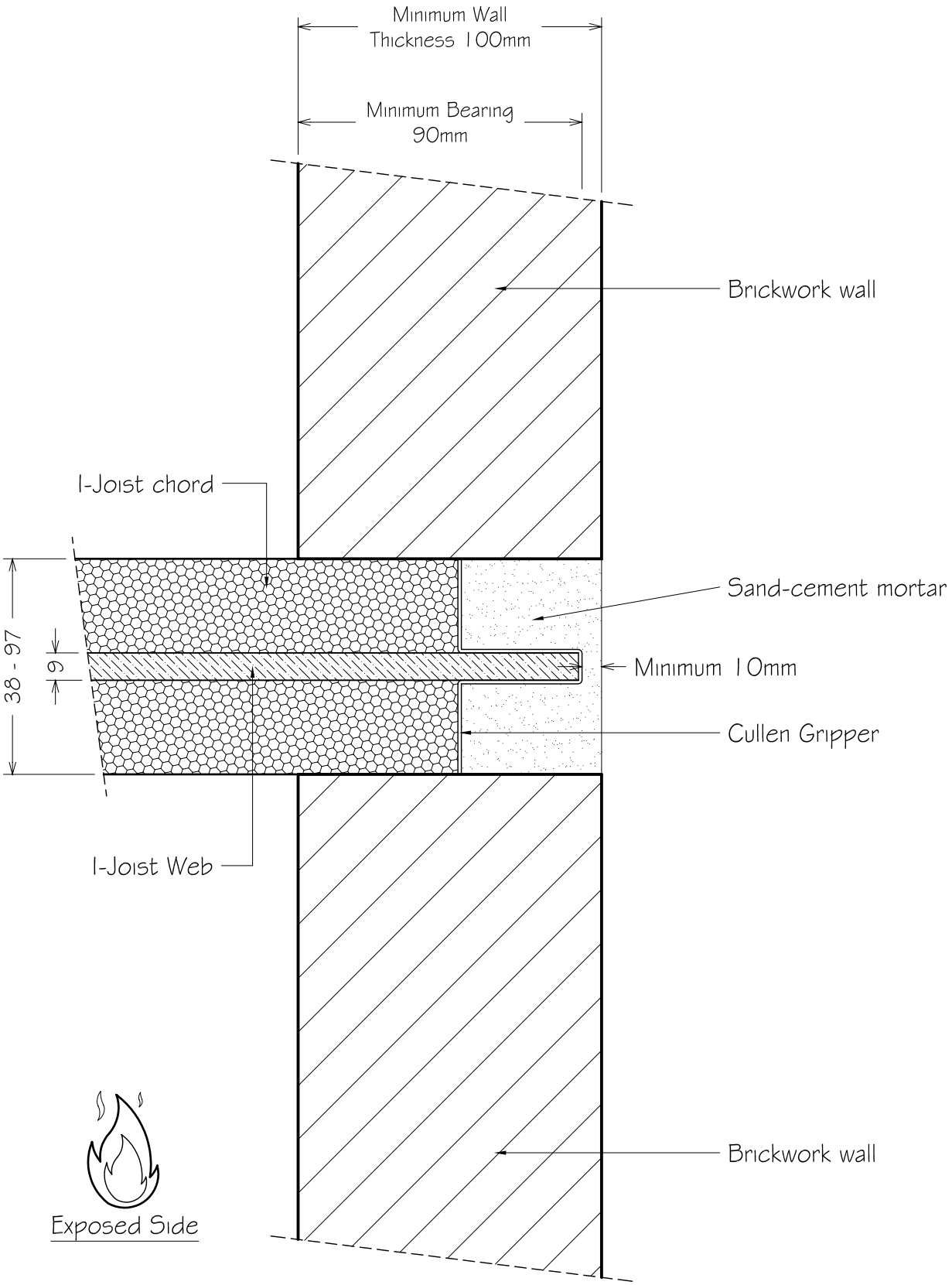




INTERNATIONAL FIRE CONSULTANTS LTD
20 Park Street Princes Risborough Buckinghamshire HP27 9AH United Kingdom
Tel: +44 (0) 1844 275500 Fax: +44 (0) 1844 274002 Email: ifc@intfire.com Website: http://www.intfire.com

Assessment Report IFCA/08096
Cullen Building Products Ltd
Cullen Gripper Joist Penetration Sealing System when used in Conjunction with a Floor Constructed from Composite Timber Joist I-beams

Section H-H:
Horizontal Cross Section

| | |
|---|---|
| Job number : 8977 | |
| Drawn by : CSP | Checked by : CM |
| Not To Scale | July 2008 |
| 08096/05 | |